General Purpose Bomb Fast Cook-Off Mitigation Techniques

Presented by:

Jen Duchow
BLU-110 Technical Lead

Brian Hays
BLU-111,117 Technical Lead

10/13/2010

Contributing Author:
Tony Walls

Objective

- Joint Air Force/Navy program
  - Mitigate response of GP bombs to FCO

Relative Likelihood Of Experiencing A Given IM Threat					
	FCO	SCO	BI	FI	SD
Relative Likelihood of Experiencing IM Threats in a shipboard environment (1)	8	1	3	3	5

  - Maintain current BLU-111, BLU-110, and BLU-117 penetration and fragmentation performance
  - Maintain current mass properties
  - Limit cost increase
  - Little or no impact to logistics
  - Minimal impact to bomb hardware

(1) Navy Insensitive Munitions Prioritization Methodology Brief by Rob Maline, NOSSA, 2003

Design Considerations

- Structural
  - Penetration loading
- Compatible with existing tail kits, fuzes, pallets etc.
  - Quickstrike mines kit
- Variable area available for venting
  - Minimum area required for venting determined through testing
- Manufacturing
- De-mil procedures

IM Mitigation Techniques

- Stress riser with pad of Cellogen
  - Sodium Carboxy Methylcellulose
  - Used to enhance internal pressure in bomb during SCO

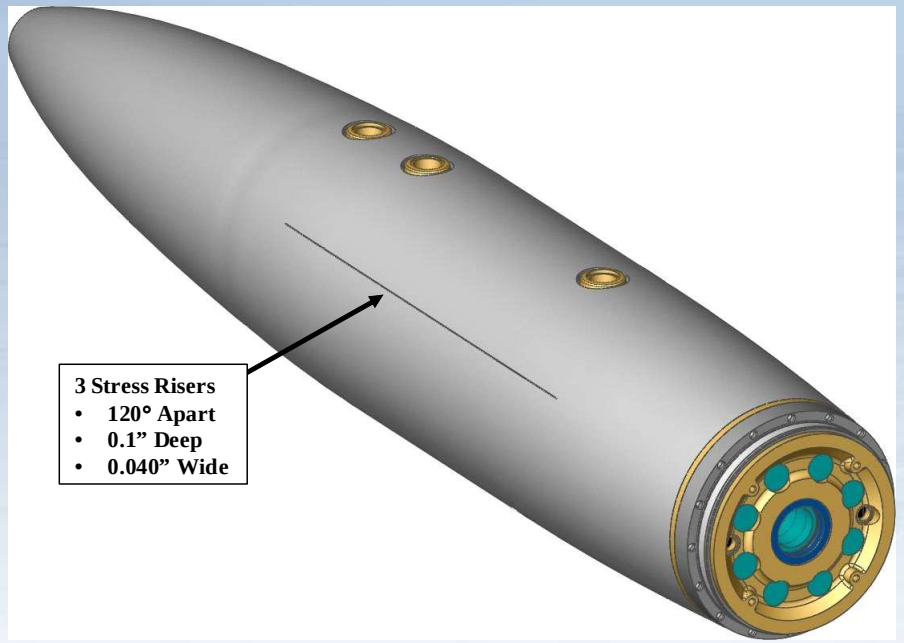

IM Mitigation Techniques

- Vented aluminum base plug
  - Increased vent area due to erosion

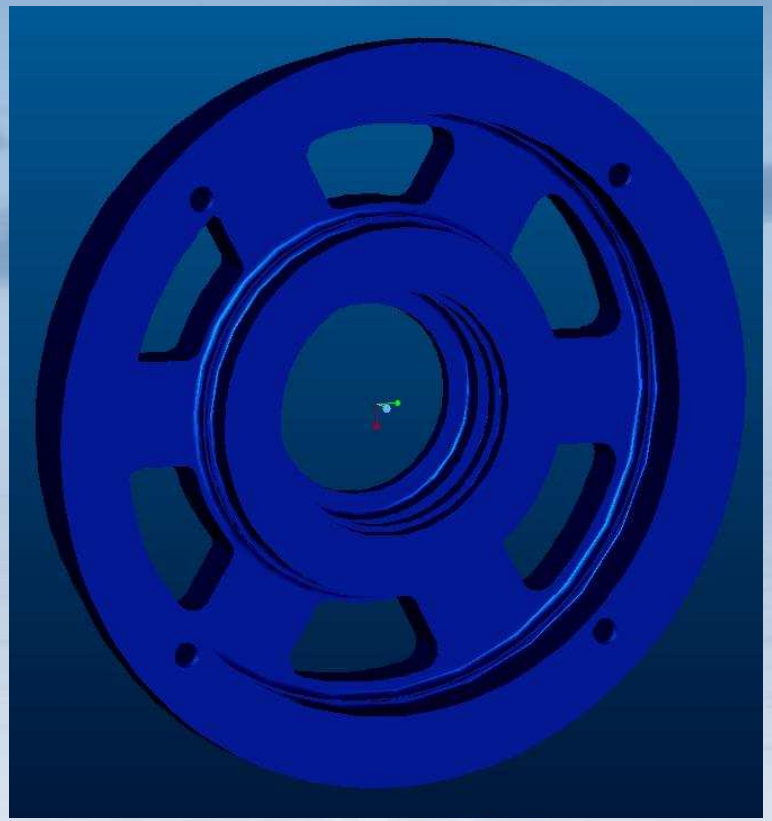

- Aluminum unable to meet penetration requirements
- Potential corrosion issues due to dissimilar metals

IM Mitigation Techniques

- Collapsible fuze liner
  - SCO mitigation only

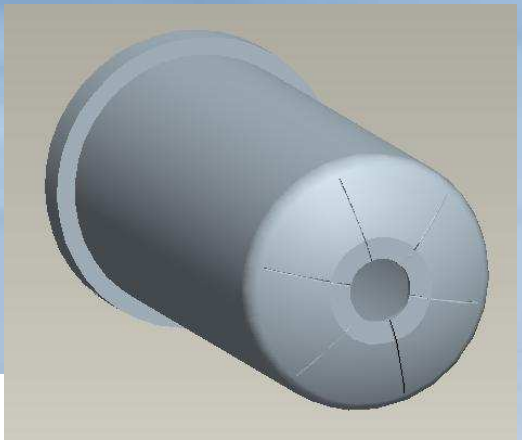

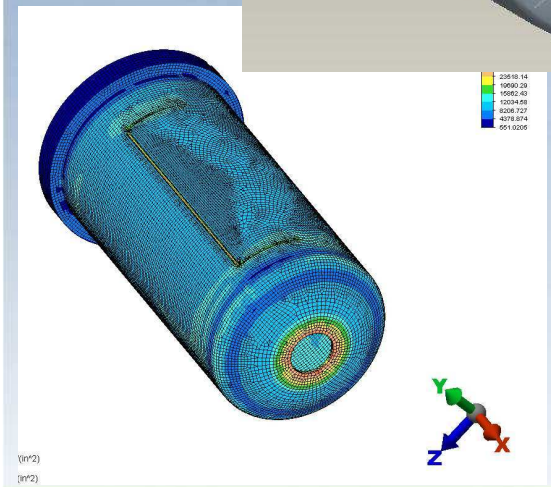

- Thermally releasable fuze liner

Channel Stress Riser

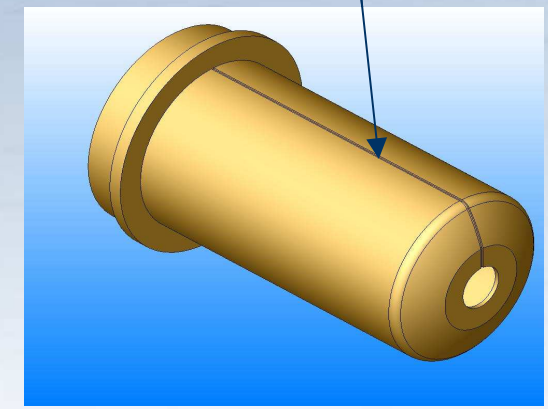

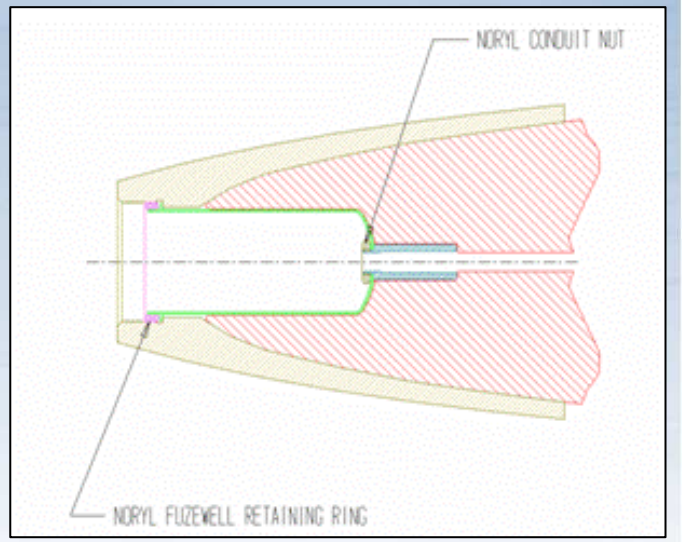

Base Plug Closure Techniques

- Tamper Resistance/ Environmental Seal
  - ABS Dust cover
  - Press-fit annular plug
  - Thermally releasable vent cover
  - Driv-lok studs/Screws
  - Adhesive/Sealant

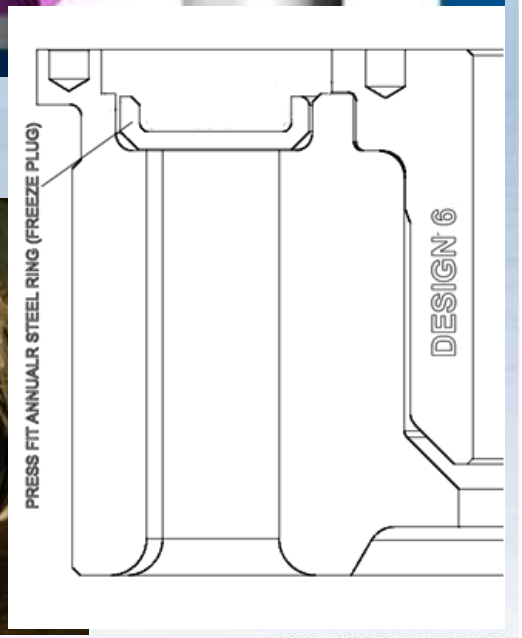

BLU-117 Preliminary Design

- Iterative design process using:
  - PBXN-109
    - Stress risers on bomb case
  - Stress risers on fuze liner
  - Individual vent plugs
  - MNX-794 melt case explosive

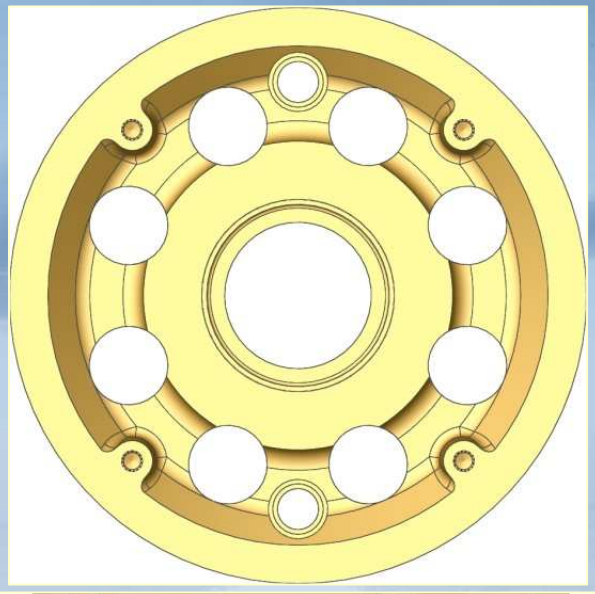

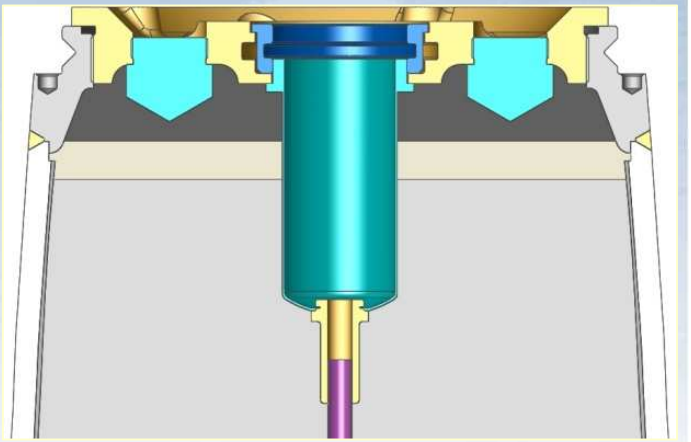

BLU-117 FCO Testing

- 2 FCO conducted with no vent covers to verify sufficient vent area
  - Both passed
- 4 FCO conducted with annular vent cover
  - All passed
- Vent areas determined from developmental testing, lessons learned, other weapon systems
- Port shape was driven by strength requirements

BLU-117 FCO Testing

- Tested vent areas 19-32 in^2

BLU-117 Final Design

- 25 in^2 vent area
- AFX-795 (melt cast)

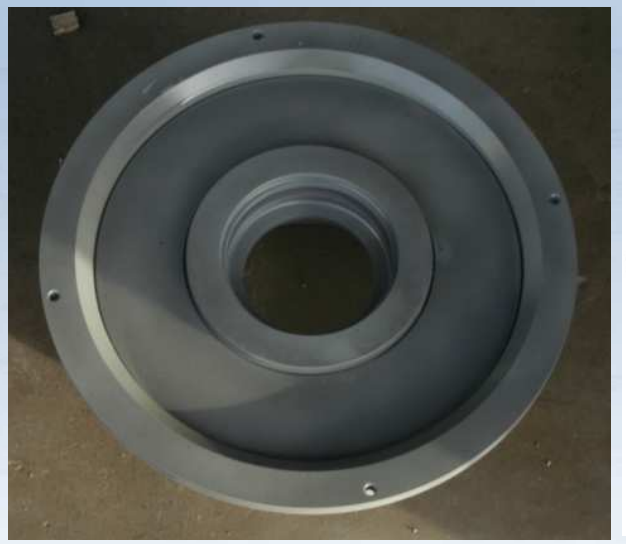

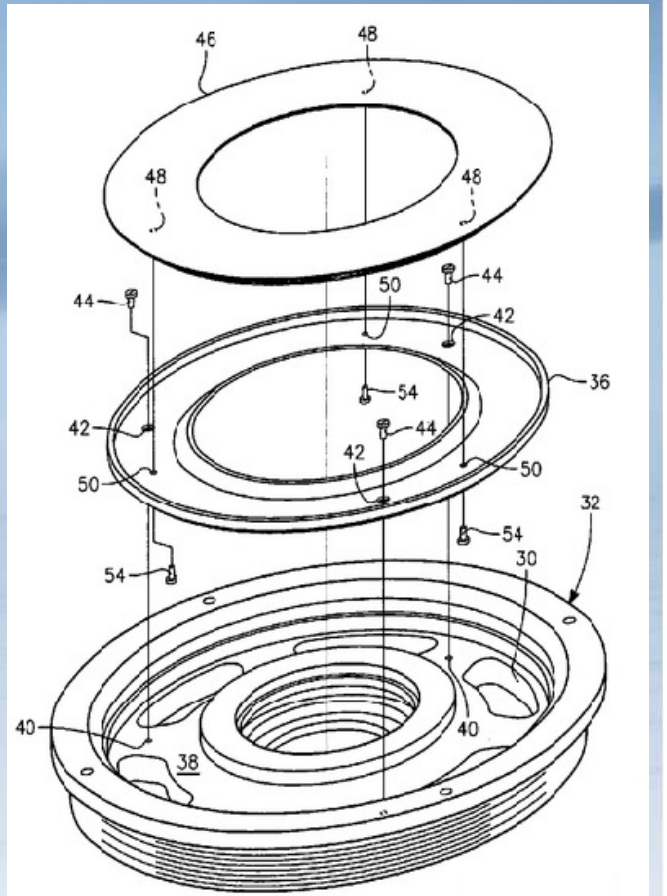

U.S. Patent
US 7,472,653 B1

BLU-117 IM Qualification Test Results

BLU-117 A/B (PBXN-109)

FCO	SCO	BI	FI	SR	SCJ
IV	IV	IV	V	(F)	(F)

BLU-117 C/B (AFX-795/Aft Venting)

FCO	SCO	BI	FI	SR	SCJ
V	V	III	III	(F)	(F)

BLU-111 Unique Design Considerations

- External water pressure
- Quickstrike
- Torque Requirements
- Small cross sectional area to work with
  - Fuze liner retaining ring design
  - Shipping Cap

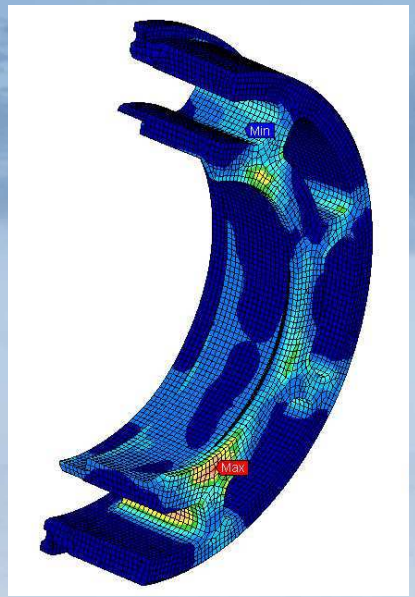

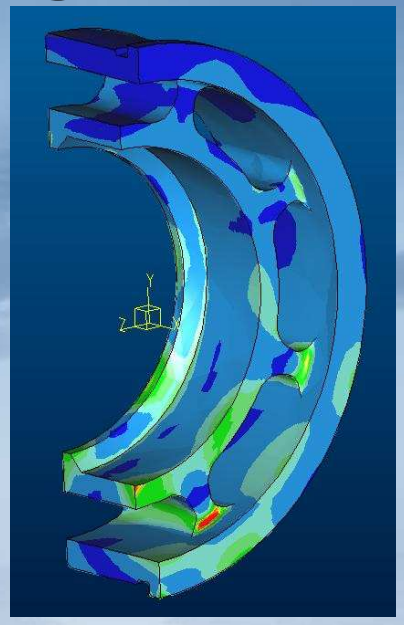

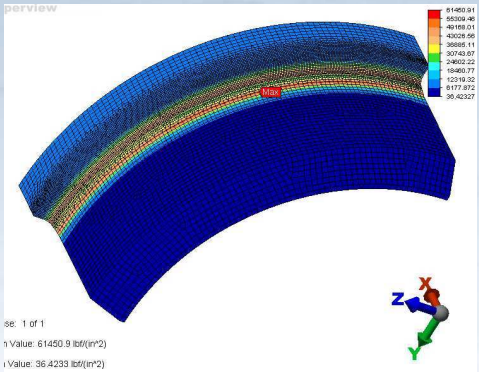

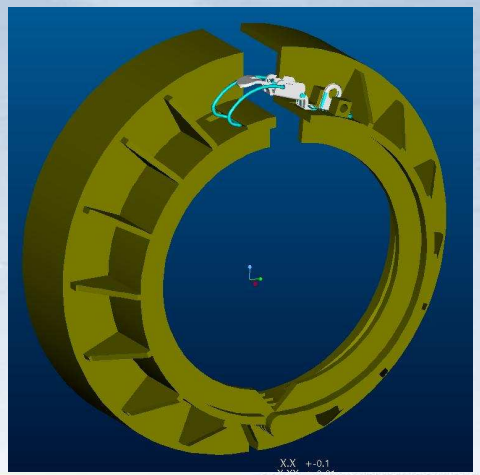

BLU-111 FCO Testing

- Tested vent areas 3-10 in^2
- Design margin for FCO at 3 in^2

BLU-111 Final Design

- 4 in^2 vent area
- PBXN-109

BLU-111 IM Qualification Test Results

BLU-111 A/B (PBXN-109)

FCO	SCO	BI	FI	SR	SCJ
IV	IV	V	V	(F)	(F)

BLU-111 C/B (PBXN-109/Aft Venting)

FCO	SCO	BI	FI	SR	SCJ
V	IV	V	IV	(F)	I

BLU-110 Unique Design Considerations

- Streamlined design effort due to BLU-111 and BLU-117 data collected
- Watertight seal for Quickstrike compatibility
- High penetration loads
- Incorporate part commonality with BLU-111

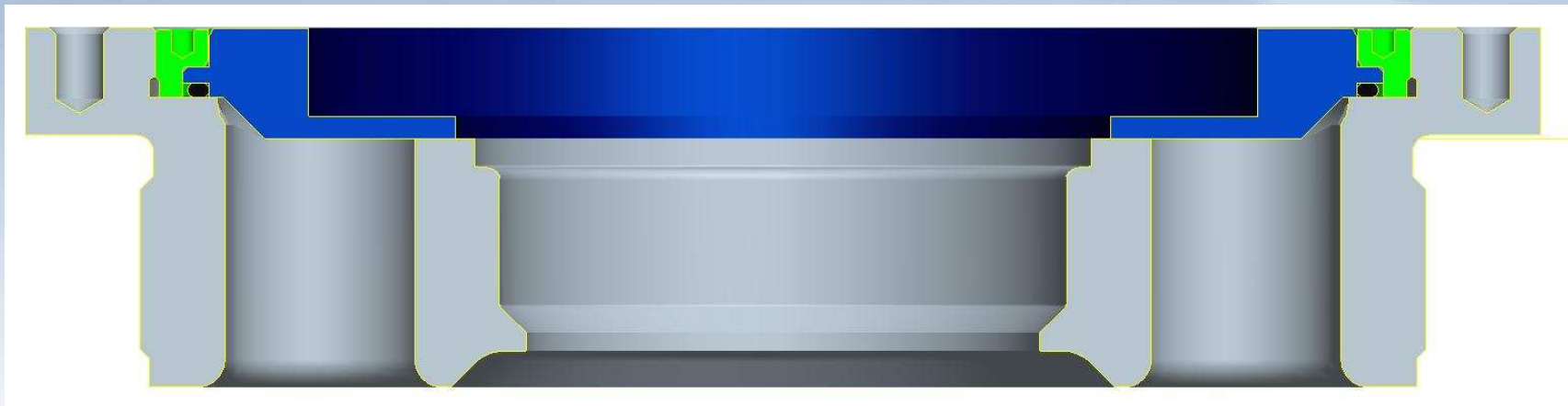

BLU-110 FCO Testing

- Tested vent areas 10-25 in^2

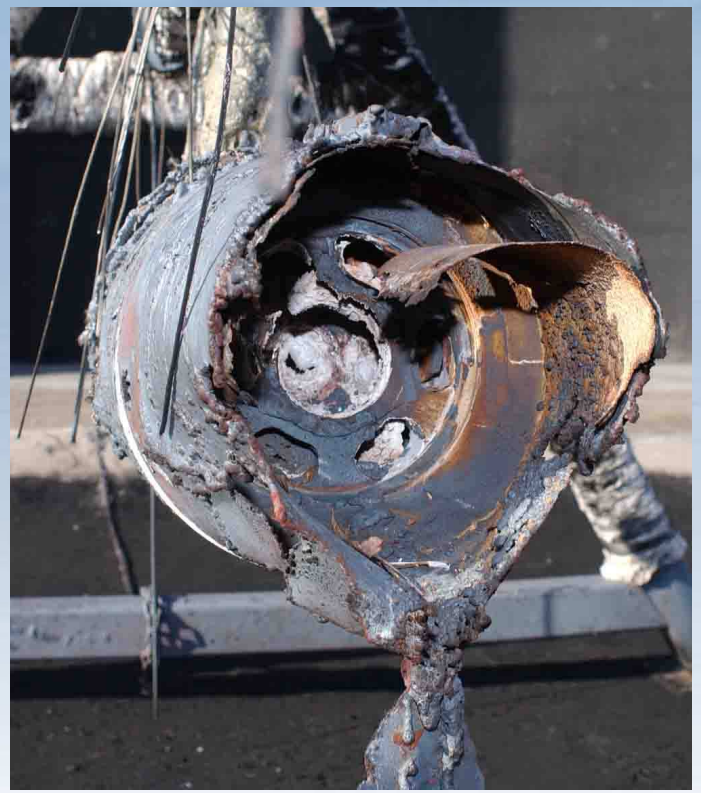

BLU-110 Final Design

- 10 in^2 vent area
- PBXN-109

BLU-110 IM Qualification Test Results

BLU-110 A/B (PBXN-109)

FCO	SCO	BI	FI	SR	SCJ
IV / V	V	IV	V	(F)	(F)

BLU-110 C/B (PBXN-109/Aft Venting)

FCO	SCO	BI	FI	SR	SCJ
V	III	IV	V	(F)	(F)

Summary

- All three bomb weight classes passed FCO with a Type V reaction
- Each weight class utilizes the same explosive in the AF and Navy versions
- Improved SCO in the 2000 lb version
- 500 lb and 2000 lb versions have been fully re-qualified and are starting production
- All bombs are compatible with existing fuzes, pallets, and guidance kits
- Mass property limits were maintained

Acknowledgements

- John Baronowski
- Fred Becker
- Sharon Berry
- Vicki Brady
- Mark Buffum
- Que Bui-dang
- Bland Burchett
- Don Burnett
- Terry Byrd
- Steve Capello
- Jimmy Countz
- Herb Gollmar
- Bob Gramm
- Lee Hardt
- Rich Hardy
- Terry Heaton
- Stephen Kelly
- Thomas Krawietz
- Bob Koontz
- Mike Martyn
- Carol Meade
- Kelly Minnick
- Brad Patello
- Gregg Schroeder
- Chuck Schneider
- Brad Weich
- John Yelverton
- Frank Zaborowski
- Test Management Office
  - Al Avery
  - Brennan Clark
  - Mandy Lazar

CURRENT IM STATUS OF GENERAL PURPOSE BOMBS

Incremental Improvements

1950's to 1980's

Change in Explosive

Late 1980's

Change in Mechanical Design

+2005

		FCO	SCO	BI	FI	SR	SCJ
MK 82 (500lb)	Tritonal/H-6	(F)	(F)	(F)	(F)	(F)	(F)
MK 83 (1000lb)	Tritonal/H-6	(F)	(F)	(F)	(F)	(F)	(F)
MK 84 (2000lb)	Tritonal/H-6	(F)	(F)	(F)	(F)	(F)	(F)
BLU-111A/B (500lb)	PBXN-109	IV	IV/V	V	V	(F)	(F)
BLU-110A/B (1000lb)	PBXN-109	IV / V	V	IV	V	(F)	(F)
BLU-117A/B (2000lb)	PBXN-109	IV	IV	IV	V	(F)	(F)
BLU-111 (PBXN-109/Nose & Aft Venting)		V	IV	V	IV	(F)	I
BLU-110 (PBXN-109/Aft Venting)		V	III	IV	V	(F)	(F)
BLU-117 (AFX-795 + Aft Venting)		V	V	III	III	(F)	(F)